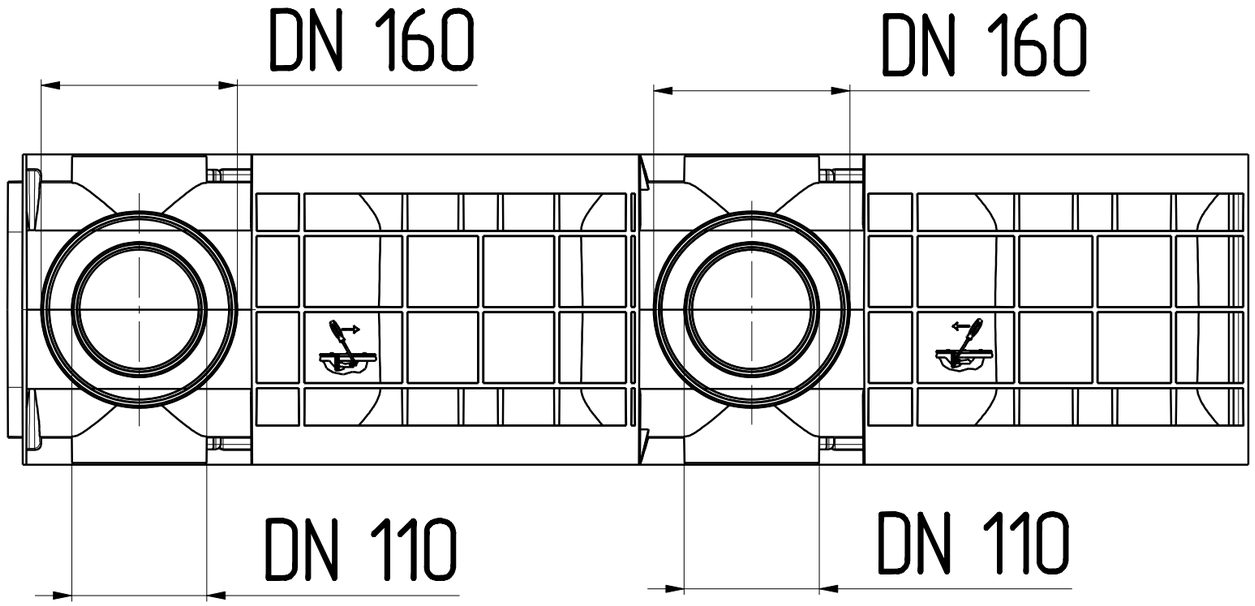
DN 160
DN 160
DN 110
DN 110

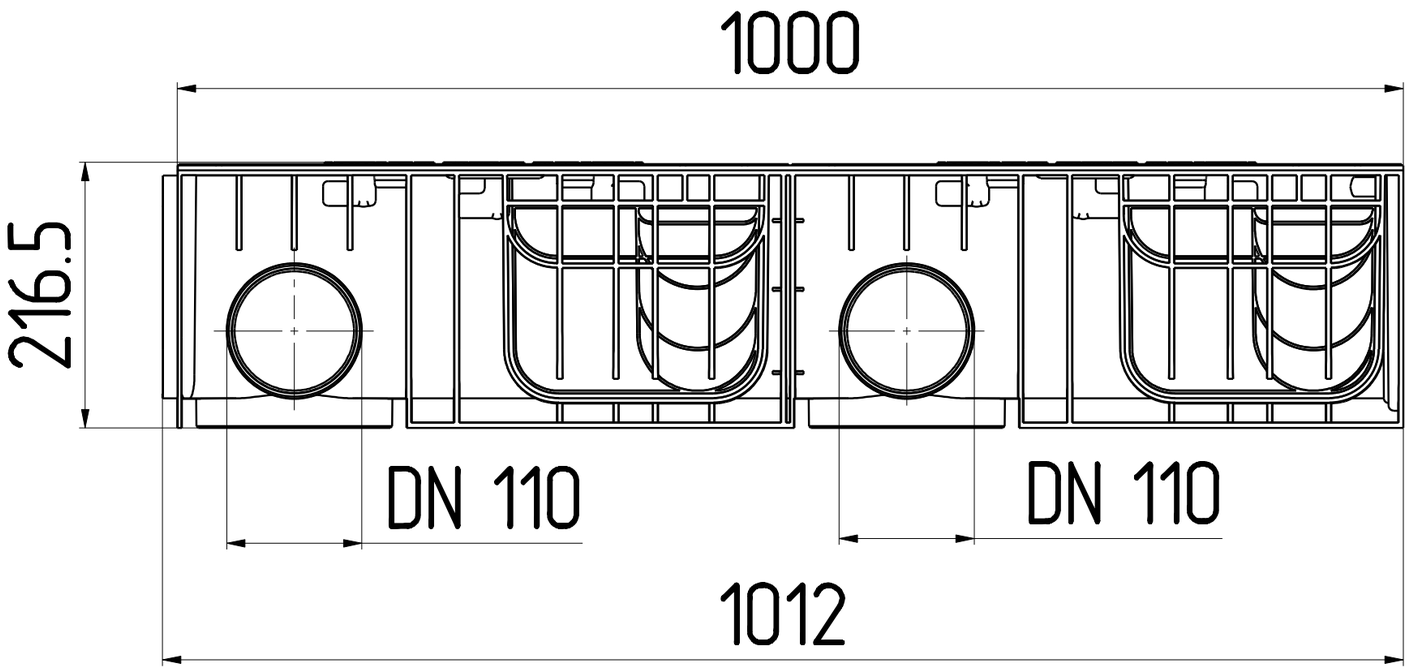
1000
216.5
DN 110
DN 110
1012

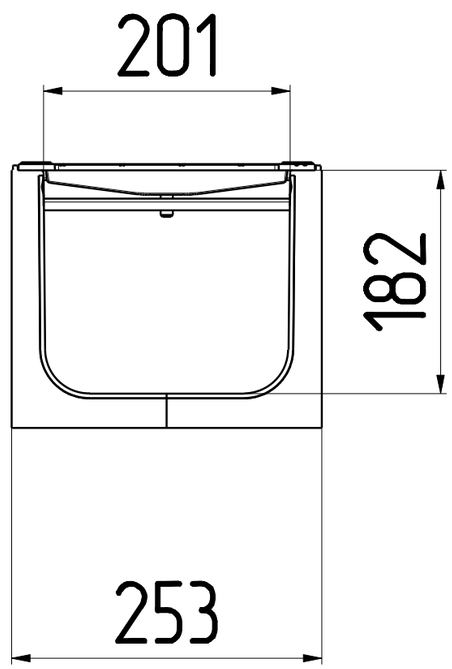
201
182
253